ACTUATOR: M50 SUBSEA SL150

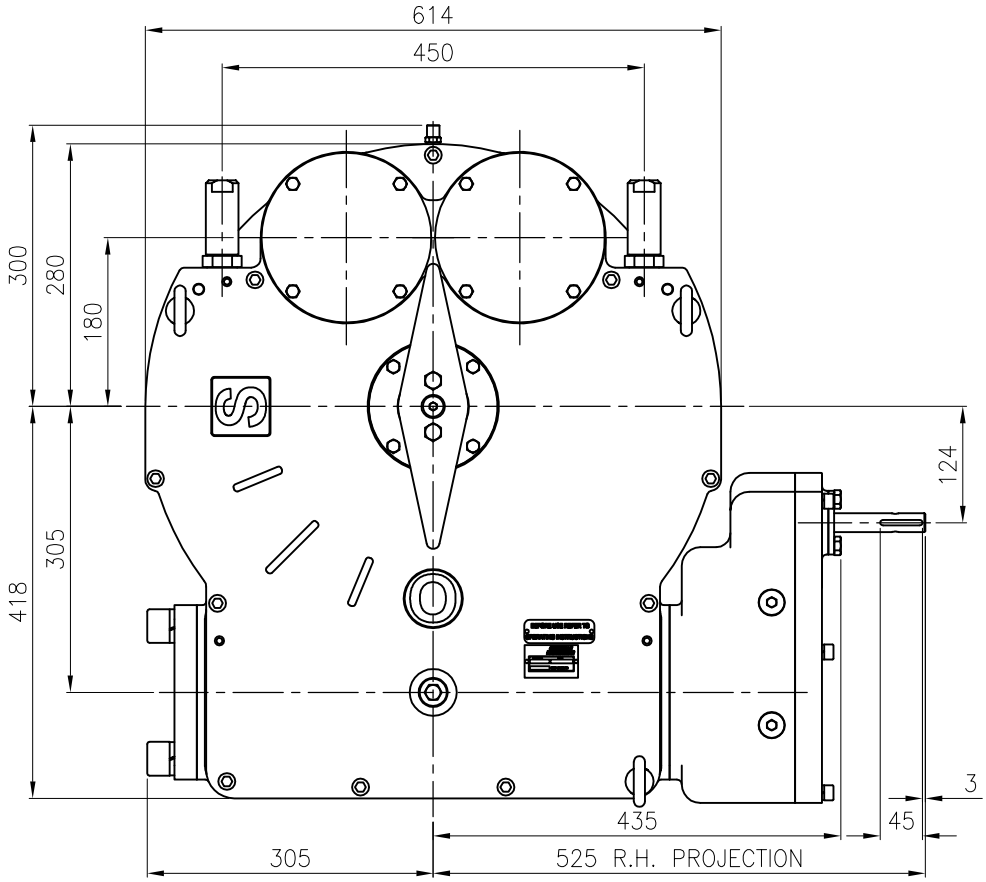

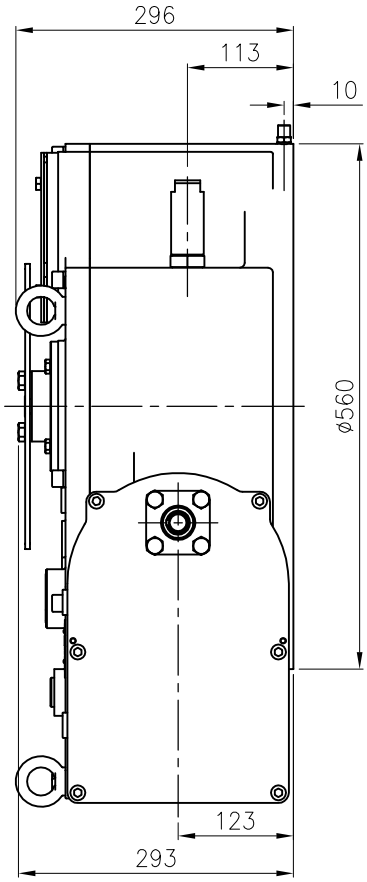

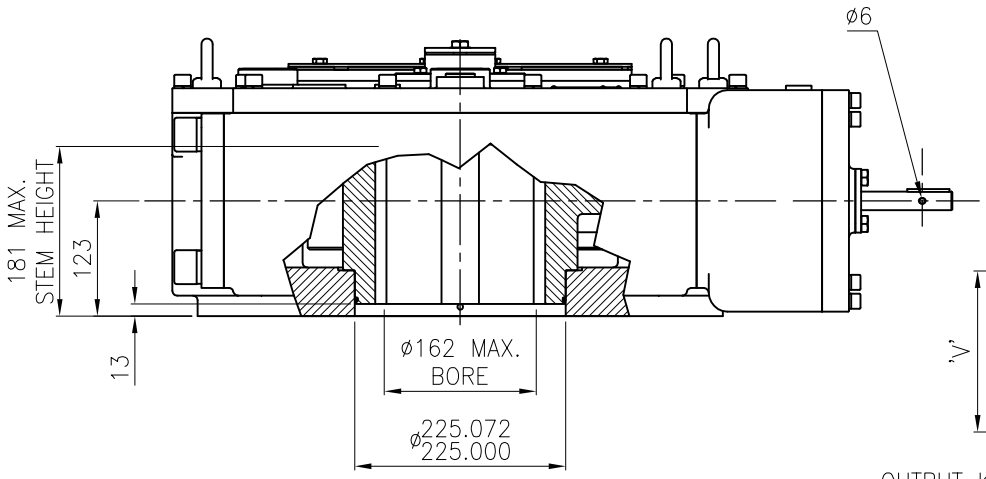

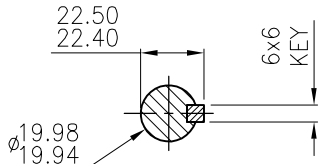

INPUT SHAFT DETAILS

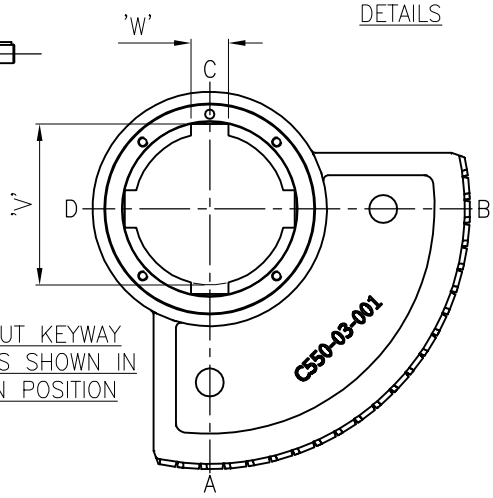

OUTPUT KEYWAY DETAILS SHOWN IN OPEN POSITION

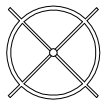

CAPSTAN TYPE HANDWHEEL

REFERENCE	–	C4–24
DIAMETER	–	600mm [24"]
OVER SPOKE	–	800mm [32"]

TRAVEL ..... 90° ±5° AT BOTH ENDS
RATIO 1219.8:1
TURNS TO CLOSE 304.95

MECHANICAL ADVANTAGE..... 384.6 ±10%
MAXIMUM OUTPUT TORQUE (1000 CYCLES)..... 50000 Nm
MAXIMUM INPUT TORQUE (1000 CYCLES)..... 130 Nm

MOUNTING HOLE DETAIL (BSENISO 5211:2001)
PREFERRED ..... F48 (12 x M36 on 483 PCD)
MAXIMUM ..... F48 (12 x M36 on 483 PCD)
MINIMUM ..... F25 (8 x M16 on 254 PCD)

APPROXIMATE WEIGHT ..... 426 kg

OPPERMAN MASTERGEAR
Hambridge Lane, Newbury, Berkshire, RG14 5TS. ENGLAND
Tel: 01635 811500 Fax: 01635 811501 E-Mail: sales@opperman-mastergear.co.uk

To BS308

DIMENSIONS IN MM [INCHES]

DATE	11Aug09
DRAWN	PAB
CHECKED	
SCALE	1:8

This drawing/design is the property of OPPERMAN MASTERGEAR Ltd. © and must not be used or copied without their specific written consent. Specifications may change without prior notification

DRG No. ME–16167 REV. A